ENGINEERING CHANGE PROPOSAL (SHORT FORM)
(SEE MIL-STD-481 FOR INSTRUCTIONS)

DATE PREPARED: 10/7/85

ECP: ES(00 001

PROCURING ACTIVITY NO.: 80063

1. ORIGINATOR NAME AND ADDRESS
Star Dynamic Corporation
5711 Kennedy Blvd., North Bergen, NJ 07047

2. MFR. CODE: 60468

3. CLASS OF ECP:

4. AUST. CODE:

5. PRIC

6. SPECIFICATIONS AFFECTED

MFR. CODE	SPECIFICATION/DOCUMENT NO.

7. DRAWINGS AFFECTED

MFR. CODE	NUMBER	REV
80063	SC-B-84440	B
80063	SM-B-888119	A

8. TITLE OF CHANGE
Window Assembly

9. CONTRACT NO. & LINE ITEM
DAAB07-85-C-0300
0001

10. CONFIGURATION ITEM NOMENCLATURE
Switchboard, Telephone Manual SB-22A/PT

11. IN PRODUCTION
[X] YES [ ] NO

12. NAME OF PART OR LOWEST ASSEMBLY AFFECTED
Window Assembly

13. PART NO. OR TYPE DESIGNATION
SC-B-84440B

14. DESCRIPTION OF CHANGE

Delete the alternate design for the window assembly, p/o the magneto signal assembly and substitute the proposed alternate design.

15. NEED FOR CHANGE

The current alternate design is defective in that it calls for an all steel nut that radically changes the magnetic circuit of the signal preventing adjustment of the sensitivity and does not allow the signal to function within the specified electrical operating parameters.

16. EFFECT ON ASSOCIATED EQUIPMENT
None

17. PRODUCTION EFFECTIVITY BY SERIAL NO.
All

18. EFFECT ON PRODUCTION DELIVERY SCHEDULE
None

19. RECOMMENDED RETROFIT EFFECTIVITY
None

20. ESTIMATED KIT DELIVERY SCHEDULE
N/A

21. ESTIMATED COSTS/SAVINGS
None

22. SUBMITTING ACTIVITY AUTHORIZING SIGNATURE
[signature]

TITLE
Vice President, Engineering

23. APPROVAL/[illegible]

GOVERNMENT ACTIVITY: AMSEL-ED-CS-1

SIGNATURE: [signature]

DATE: 16 October 1

DD FORM 1693

ENCL 5A

NOTICE OF REVISION (NOR)
(SEE MIL-STD-480 FOR INSTRUCTIONS)

This revision described below has been authorized for the document listed.

1. ORIGINATOR NAME AND ADDRESS	DATE	MFG. CODE	NO.
Star Dynamic Corporation 5711 Kennedy Blvd., North Bergen, NJ 07047	10/7/85	60468	010

2. TITLE OF DOCUMENT	3. MFG. CODE	4. DOCUMENT NUMBER
Window Assembly	80063	SC-B-84440
	5. REVISION LETTER (DOCUMENT) B	(NOR) C
		6. ECP NO. E5G0300001

7. CONFIGURATION ITEM (OR SYSTEM) TO WHICH ECP APPLIES

Switchboard, Telephone Manual SB-22A/PT

8. DESCRIPTION OF REVISION

Delete reference to drawing SM-B-888119 in note 1. and substitute reference to new drawing covering proposed design.

9. THIS SECTION FOR GOVERNMENT USE ONLY

A. CHECK ONE

☒ EXISTING DOCUMENT SUPPLEMENTED BY THIS NOR MAY BE USED IN MANUFACTURE.

☐ REVISED DOCUMENT MUST BE RECEIVED BEFORE MANUFACTURER MAY INCORPORATE THIS CHANGE.

☐ CUSTODIAN OF MASTER DOCUMENT SHALL MAKE ABOVE REVISION AND FURNISH REVISED DOCUMENT TO:

9. ACTIVITY AUTHORIZED TO APPROVE CHANGE FOR GOVERNMENT	SIGNATURE AND TITLE	DATE
AMSEL-GD-CS-1	[signature] CMO	16 Oct 85
10. ACTIVITY ACCOMPLISHING REVISION	REVISION COMPLETED (SIGNATURE)	DATE

NOTICE OF REVISION (NOR)
(SEE MIL-STD-480 FOR INSTRUCTIONS)

This revision described below has been authorized for the document listed.

1. ORIGINATOR NAME AND ADDRESS	DATE	MFG. CODE	NOR. NO.
Star Dynamic Corporation 5711 Kennedy Blvd., North Bergen, NJ 07047	10/7/85	60468	020

2. TITLE OF DOCUMENT	3. MFG. CODE	4. DOCUMENT NUMBER
Nut	80063	SM-B-888119
	5. REVISION LETTER (DOCUMENT) A	6. ACTION Delete / 7. ECP NO. ESG03(

7. CONFIGURATION ITEM (OR SYSTEM) TO WHICH ECP APPLIES

Switchboard, Telephone Manual SB-22A/PT

8. DESCRIPTION OF REVISION

Delete entire drawing.

9. THIS SECTION FOR GOVERNMENT USE ONLY

A. CHECK ONE

- [x] EXISTING DOCUMENT SUPPLEMENTED BY THIS NOR MAY BE USED IN MANUFACTURE.
- [ ] REVISED DOCUMENT MUST BE RECEIVED BEFORE MANUFACTURER MAY INCORPORATE THIS CHANGE.
- [ ] CUSTODIAN OF MASTER DOCUMENT SHALL MAKE REVISION AND FURNISH REVISED DOCUMENT TO

9. ACTIVITY AUTHORIZED TO APPROVE CHANGE FOR GOVERNMENT	SIGNATURE AND TITLE	DATE
AMSEL-ED-CS-1	[signature] CMO	16 Oct

10. ACTIVITY DESIGNATED REVISION	REVISION COMPLETED (SIGNATURE)	DATE

NOTICE OF REVISION (NOR)
(SEE MIL-STD-480 FOR INSTRUCTIONS)

This revision described below has been authorized for the document listed.

1. ORIGINATOR NAME AND ADDRESS	DATE	MFR. CODE	REQ. NO.
Star Dynamic Corporation 5711 Kennedy Blvd., North Bergen, NJ 07047	10/7/85	60468	030

2. TITLE OF DOCUMENT	3. MFR. CODE	4. DOCUMENT NUMBER	5. REVISION LETTER	6. ECP NO.
Nut and Ring Assembly	80063	New	-	E5G0300001

7. CONFIGURATION ITEM (OR SYSTEM) TO WHICH ECP APPLIES

Switchboard, Telephone Manual SB-22A/PT

8. DESCRIPTION OF REVISION

In accordance with Sketch 6210-102 dtd 9/25/85 attached, on new Government drawing format.

9. THIS SECTION FOR GOVERNMENT USE ONLY

A. ENGR USE

- [X] EXISTING DOCUMENT SUPPLEMENTED BY THIS NOR MAY BE USED IN MANUFACTURE.
- [ ] REVISED DOCUMENT MUST BE RECEIVED BEFORE MANUFACTURER MAY INCORPORATE THIS CHANGE.
- [ ] CUSTODIAN OF MASTER DOCUMENT SHALL MAKE ABOVE REVISION AND FURNISH REVISED DOCUMENT TO:

8. ACTIVITY AUTHORIZED TO APPROVE CHANGE FOR GOVERNMENT	SIGNATURE AND TITLE	DATE
AMSEL-ED-CS-1	[signature] CMO	16 Oct 85

10. ACTIVITY COMPLIANCE REVISION	REVISION COMPLETED (SIGNATURE)	DATE

DD FORM 1695

NOTICE OF REVISION (NOR)
(SEE MIL-STD-480 FOR INSTRUCTIONS)

This revision described below has been authorized for the document listed.

1. ORIGINATOR NAME AND ADDRESS	DATE	APPR. CODE	REQ. NO.
Star Dynamic Corporation 5711 Kennedy Blvd., North Bergen, NJ 07047	10/7/85	60468	040

2. TITLE OF DOCUMENT	3. REQ. CODE	4. DOCUMENT NUMBER
Nut	80063	New
	5. REVISION LETTER (DOCUMENT) -	6. ACP NO. FSC03000

7. CONFIGURATION ITEM (OR SYSTEM) TO WHICH ECP APPLIES

Switchboard, Telephone Manual SB-22A/PT

8. DESCRIPTION OF REVISION

In accordance with Sketch # 6210-101 dtd 9/25/85 attached, on new Government drawing format.

9. THIS SECTION FOR GOVERNMENT USE ONLY

A. CHECK ONE

- [x] EXISTING DOCUMENT SUPPLEMENTED BY THIS NOR MAY BE USED IN MANUFACTURE.
- [ ] REVISED DOCUMENT MUST BE RECEIVED BEFORE MANUFACTURER MAY INCORPORATE THIS CHANGE.
- [ ] CUSTODIAN OF MASTER DOCUMENT SHALL MAKE INDEPENDENT REVISION AND FURNISH REVISED DOCUMENT TO:

9. ACTIVITY AUTHORIZED TO APPROVE CHANGE FOR GOVERNMENT	SIGNATURE AND TITLE	DATE
AMSEL-ED-CS-1	Lawrence J. Fiocken CMO	16 Oct 8

10. ACTIVITY ACCOMPLISHING REVISION	REVISION COMPLETED (SIGNATURE)	DATE

NOTICE OF REVISION (NOR)
(SEE MIL-STD-480 FOR INSTRUCTIONS)

This revision described below has been authorized for the document listed.

1. ORIGINATOR NAME AND ADDRESS	DATE	MFR. CODE	NOR. NO.
Star Dynamic Corporation 5711 Kennedy Blvd., North Bergen, NJ 07047	10/7/85	60468	050

2. TITLE OF DOCUMENT	3. MFR. CODE	4. DOCUMENT NUMBER
Ring	80063	New
	5. REVISION LETTER (COMMENTS) -	6. ECP NO. ESG030000[illegible]

7. CONFIGURATION ITEM (OR SYSTEM) TO WHICH ECP APPLIES

Switchboard, Telephone Manual SB-22A/PT

8. DESCRIPTION OF REVISION

In accordance with Sketch # 6210-100 dtd 9/25/85 attached, on Government drawing format.

9. THIS SECTION FOR GOVERNMENT USE ONLY

A. CHECK ONE

- [x] EXISTING DOCUMENT SUPPLEMENTED BY THIS DOC MAY BE USED IN MANUFACTURE.
- [ ] REVISED DOCUMENT MUST BE RECEIVED BEFORE MANUFACTURER MAY INCORPORATE THIS CHANGE.
- [ ] CUSTODIAN OF MASTER DOCUMENT SHALL MAKE ABOVE REVISION AND FURNISH REVISED DOCUMENT TO:

9. ACTIVITY AUTHORIZED TO APPROVE CHANGE FOR GOVERNMENT	SIGNATURE AND TITLE	DATE
AMSEL-ED-CS-1	Lawrence J. Snider CMO	16 Oct 85
10. ACTIVITY COMPLETING REVISION	REVISION COMPLETION (SIGNATURE)	DATE

DD FORM 1695

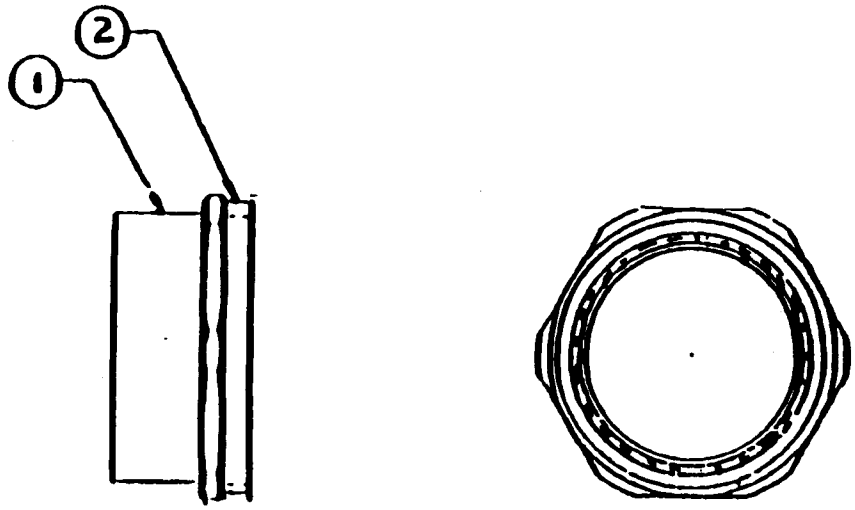

NOTE:

STAKE OR ROLL OVER BOTTOM FLANGE OF FIND NO. 1 TO SECURE FIND NO. 2 TO FIND NO. 1.

TOLERANCES (EXCEPT AS NOTED)	REVISIONS						
	NO.	DATE	BY	2	1	6210-160	RING
				1	1	6210-101	NUT
				FIND NO.	QTY	PART NO.	DESCRIPTION
DECIMAL ± —	1			NUT & RING ASSY			
FRACTIONAL ± —	2						
	3			DRAWN BY JLH	SCALE 2/1	MATERIAL —	
ANGULAR	4			CHK'D	DATE 9-25-85	DRAWING NO. [illegible]	

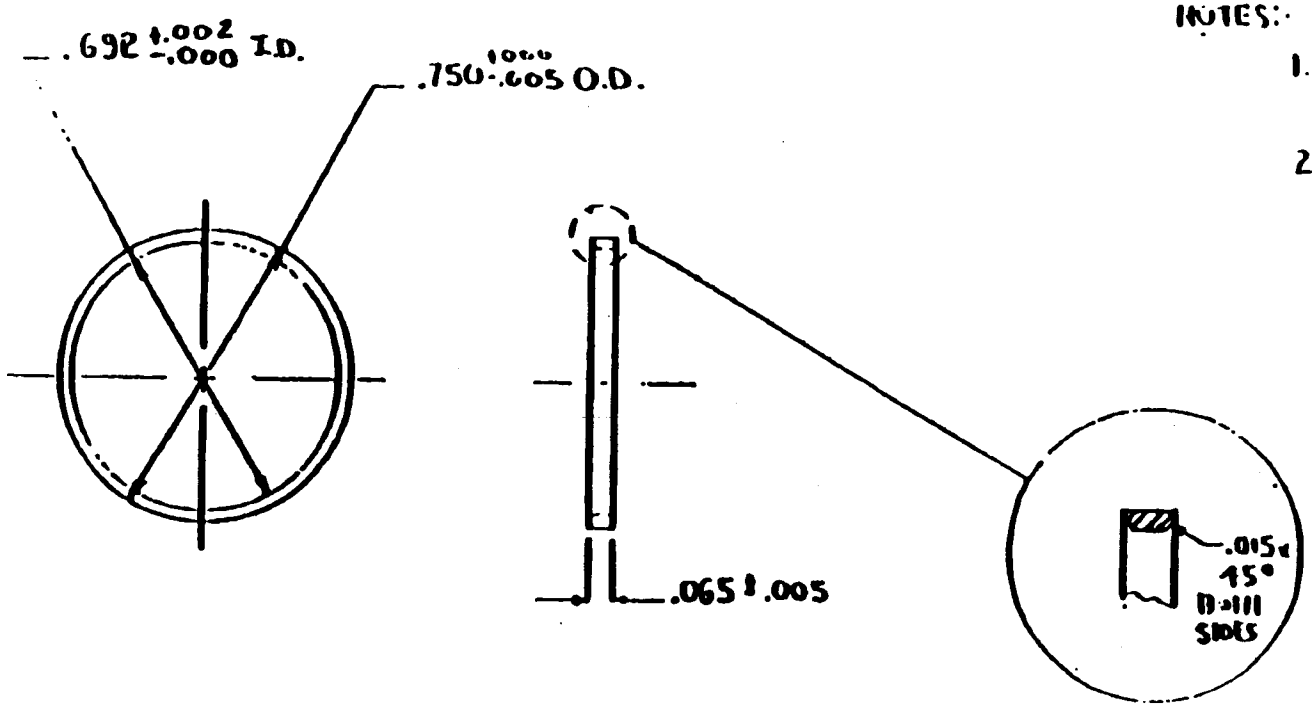

NOTES:

1. MAT'L: STEEL, FREE MACHINING, COLD FINISHED PER QQ-S-633
2. FINISH: M225 IAW MIL-F-14072

TOLERANCES	REVISIONS			
UNLESS OTHERWISE NOTED	NO.	DATE	BY	
DECIMAL ± —	1			RING
	2			
FRACTIONAL ± —	3			DRAWN BY JLH · SCALE 2/1 · MATERIAL SEE NOTE 1
	4			CHK'D · DATE 9-14-85 · DRAWING NO
ANGULAR ± —	5			TRACED · APP'D · 6210-100

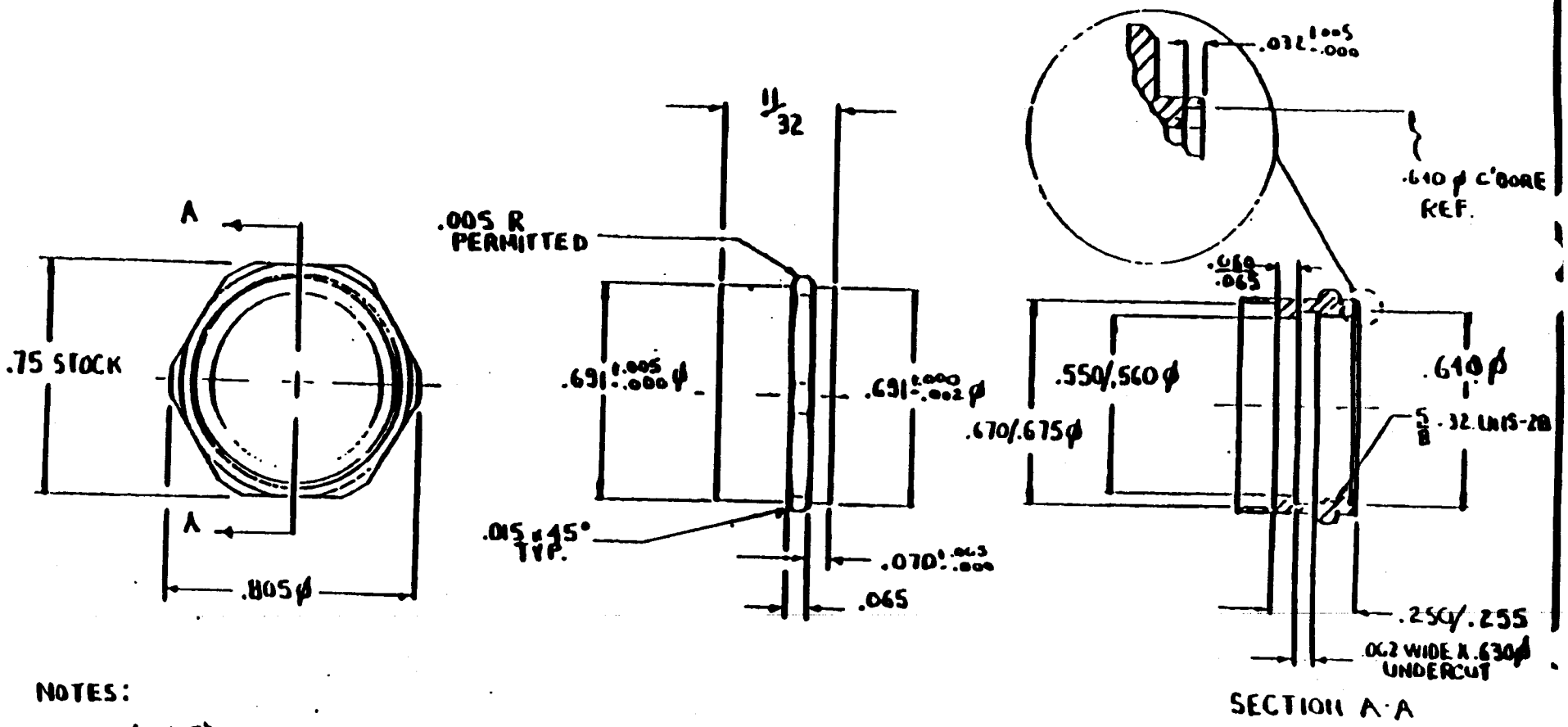

NOTES:

1. MATL: BRASS, FREE MACHINING
2. FINISH M313 IAW MIL-F-14072

TOLERANCES (UNLESS OTHERWISE NOTED)	REVISIONS					
	NO.	DATE	BY	NUT		
DECIMAL .XX ± .010 .XXX ± .005	1					
FRACTIONAL ± 1/64	2					
	3			DRAWN BY JLH	SCALE 2/1	MATERIAL SEE NOTE 1
ANGULAR	4			CHK'D	DATE 9-25-85	DRAWING NO. 6210-101

ENGINEERING CHANGE PROPOSAL
(SHORT FORM)

(See MIL-STD-481 for instructions)

DATE (YYMMDD): 930219

Form Approved OMB No 0704-0188

PROCURING ACTIVITY NUMBER:

Public reporting burden for this collection of information is estimated to average 2 hours per response, including the time for reviewing instructions, searching existing data sources, gathering and maintaining the data needed, and completing and reviewing the collection of information. Send comments regarding this burden estimate or any other aspect of this collection of information, including suggestions for reducing this burden, to Washington Headquarters Services, Directorate for Information Operations and Reports, 1215 Jefferson Davis Highway, Suite 1204, Arlington, VA 22202-4302, and to the Office of Information and Regulatory Affairs, Office of Management and Budget, Washington, DC 20503

1. ORIGINATOR NAME AND ADDRESS

HQ, U.S. ARMY CECOM
AMSEL-LC-ED-MS-2
FT. MONMOUTH, NJ 07703-5023

2. CONTRACT NUMBER AND LINE ITEM

3. PROCURING CONTRACTING OFFICER

CODE | TEL

4. TITLE OF CHANGE

ALTERNATE MATERIAL ADDITION

5. ECP NUMBER	REV	AMEND	6. CAGE CODE	7. CLASS OF ECP	8. JUST. CODE	9. PRIORITY
N3TCCZZ-002			80063	II		

10. SPECIFICATIONS AFFECTED

CAGE CODE	SPECIFICATION / DOCUMENT NO.	REV

11. DRAWINGS AFFECTED

CAGE CODE	NUMBER	REV
80063	SC-B-84520	A

12. CONFIGURATION ITEM NOMENCLATURE / TYPE DESIGNATION / WEAPON SYSTEM CODE

SB-22A/PT SWITCHBOARD

13. IN PRODUCTION

☐ YES ☒ NO

14. LOWEST ASSEMBLY AFFECTED

NOMENCLATURE	PART NO	NSN
CORD AND REEL ASSY	SC-D-35754	5805-00-607-0357

15. DESCRIPTION OF CHANGE

ADD NOTE 5 ON SC-B-84520 TO INCLUDE AN ALTERNATE MATERIAL FOR THE MANUFACTURE OF THE SPRING COMPONENT OF THE CORD AND REEL ASSY.

16. NEED FOR CHANGE

TO PROVIDE AN ADDITIONAL EQUIVALENT MATERIAL AND SOURCE FOR THE SPRING.

17. EFFECT ON ASSOCIATED EQUIPMENT

N/A

18. PRODUCTION EFFECTIVITY BY SERIAL NUMBER

N/A

19. EFFECT ON PRODUCTION DELIVERY SCHEDULE

N/A

20. RECOMMENDED RETROFIT EFFECTIVITY

N/A

21. ESTIMATED KIT DELIVERY SCHEDULE

N/A

22. ESTIMATED COSTS / SAVINGS

N/A

23. SUBMITTING ACTIVITY AUTHORIZED SIGNATURE

23.a. TITLE

ELECTRONICS ENGINEER

24. APPROVAL/DISAPPROVAL a. RECOMMEND ☒ APPROVAL ☐ DISAPPROVAL

b. APPROVAL	c. GOVERNMENT ACTIVITY	SIGNATURE	DATE (YYMMDD)
☒ APPROVED ☐ DISAPPROVED	US ARMY CECOM AMSEL-LC-ED-MS-2 FORT MONMOUTH, NJ 07703		93/03/10
d. APPROVAL	**e. GOVERNMENT ACTIVITY**	**SIGNATURE**	**DATE (YYMMDD)**
☐ APPROVED ☐ DISAPPROVED			

DD Form 1693, JUL 88 — Previous editions are obsolete

ENCL 5B

NOTICE OF REVISION (NOR)

(See MIL-STD-480 for instructions)

This revision described below has been authorized for the document listed.

Date (YYMMDD): 930219

Form Approved OMB No. 0704-0188

Public reporting burden for this collection of information is estimated to average 1 hour per response, including the time for reviewing instructions, searching existing data sources, gathering and maintaining the data needed, and completing and reviewing the collection of information. Send comments regarding this burden estimate or any other aspect of this collection of information, including suggestions for reducing this burden, to Washington Headquarters Services, Directorate for Information Operations and Reports, 1215 Jefferson Davis Highway, Suite 1204, Arlington, VA 22202-4302, and to the Office of Information and Regulatory Affairs, Office of Management and Budget, Washington, DC 20503.

1. ORIGINATOR NAME AND ADDRESS HQ, US ARMY CECOM AMSEL-LC-ED-MS-2 FT. MONMOUTH, NJ 07703-5023	2. CAGE CODE: 80063 3. NOR NO.: 010 4. CAGE CODE: 80063 5. DOCUMENT NO.: SC-B-84520
6. TITLE OF DOCUMENT SPRING	7. REVISION LETTER (Current): A (New): B 8. ECP NO.: N3TCCZZ-002

9. CONFIGURATION ITEM (OR SYSTEM) TO WHICH ECP APPLIES

SB-22A/PT SWITCHBOARD

10. DESCRIPTION OF REVISION

On face of drawing under notes, add the following:

5. Alternate Material

a. Copper Tin Alloy, Phosphor Bronze Flat Wire, UNS No. C52100 per specification ASTM B159, .010 ± .0005 x .120 ± .0003 round edge. Max Camber 3/16 inch in eight feet allowable.
Work hardened and cold rolled from 133,000 psi to 143,000 psi tensile strength. Material to be such that the inner bend can be cold formed to produce a .040 radius.
Spring as fabricated by R&F Alloy Wires, Fairfield, New Jersey or equal.

b. Spring shall be preformed into a smooth spiral as shown in the free condition. It shall be free from nicks, scratches, kinks, or bends to create points of stress or fatigue. Spring to be wound into coil of 1"-9/16 max O.D. and secured by a clip, so that the inside diameter of the inner turn shall be 5/8 ± 1/32 (See Fig. I).

c. The spring shall have a maximum resistance of 3 ohms.

11. THIS SECTION FOR GOVERNMENT USE ONLY

a. CHECK ONE

☒ EXISTING DOCUMENT SUPPLEMENTED BY THIS NOR MAY BE USED IN MANUFACTURE.

☐ REVISED DOCUMENT MUST BE RECEIVED BEFORE MANUFACTURER MAY INCORPORATE THIS CHANGE.

☐ CUSTODIAN OF MASTER DOCUMENT SHALL MAKE ABOVE REVISION AND FURNISH REVISED DOCUMENT TO:

b. ACTIVITY AUTHORIZED TO APPROVE CHANGE FOR GOVERNMENT	SIGNATURE AND TITLE	DATE (YYMMDD)
U.S. ARMY CECOM FT. MONMOUTH AMSEL-LC-ED-MS-2	ELECTRONICS ENGINEER	930226
12. ACTIVITY ACCOMPLISHING REVISION	REVISION COMPLETED (Signature)	DATE (YYMMDD)