NOTICE OF REVISION (NOR)

THIS REVISION DESCRIBED BELOW HAS BEEN AUTHORIZED FOR THE DOCUMENT LISTED

1. DATE (YYYYMMDD)	Form Approved OMB No. 0704-0188
2001/10/22	

The public reporting burden for this collection of information is estimated to average 2 hours per response, including the time for reviewing instructions, searching existing data sources, gathering and maintaining the data needed, and completing and reviewing the collection of information. Send comments regarding this burden estimate or any other aspect of this collection of information, including suggestions for reducing the burden, to Department of Defense, Washington Headquarters Services, Directorate for Information Operations and Reports (0704-0188), 1215 Jefferson Davis Highway, Suite 1204, Arlington, VA 22202-4302. Respondents should be aware that notwithstanding any other provision of law, no person shall be subject to any penalty for failing to comply with a collection of information if it does not display a currently valid OMB control number.
PLEASE DO NOT RETURN YOUR COMPLETED FORM TO THIS ADDRESS. RETURN COMPLETED FORM TO THE GOVERNMENT ISSUING CONTRACTING OFFICER FOR THE CONTRACT/PROCURING ACTIVITY NUMBER LISTED IN ITEM 2 OF THIS FORM

2. PROCURING ACTIVITY NO. 80063

3. DODAAC

4. ORIGINATOR

a. TYPED NAME *(First, Middle Initial, Last)*
THOMAS E. BIFULCO

b. ADDRESS *(Street, City, State, Zip Code)*
HQ CECOM
Directorate for Communications
AMSEL-LC-COM-T-MB
Fort Monmouth, NJ 07703-5023

5. CAGE CODE 80063

6. NOR NO. 010

7. CAGE CODE 80063

8. DOCUMENT NO. SM-A-973674-1

9. TITLE OF DOCUMENT
Power Supply Assembly, Secure Voice Unit and KG-94A

10. REVISION LETTER
a. CURRENT C
b. NEW D

11. ECP NO. N2RCFBZ001

12. CONFIGURATION ITEM *(OR SYSTEM)* TO WHICH ECP APPLIES
AN/TSC-85/93/B&C (V)1&2 SATELLITE COMMUNICATIONS TERMINAL

13. DESCRIPTION OF REVISION

Change to solder posts for Figure 1, sheet 9

TO

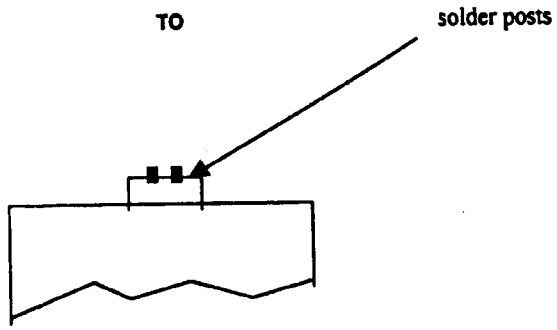

FROM

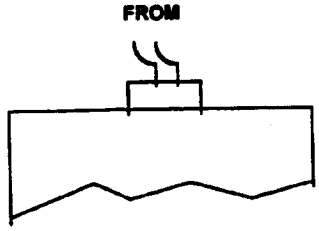

14. THIS SECTION FOR GOVERNMENT USE ONLY

a. *(X one)*
- [X] (1) Existing document supplemented by this NOR may be used in manufacture.
- [ ] (2) Revised document must be received before manufacturer may incorporate this change.
- [ ] (3) Custodian of master document shall make above revision and furnish revised document.

b. ACTIVITY AUTHORIZED TO APPROVE CHANGE FOR GOVERNMENT
HQ CECOM
Directorate for Communications
AMSEL-LC-COM-T-MB
Fort Mohmouth, NJ 07703-5023

c. TYPED NAME *(First, Middle Initial, Last)*
THOMAS E. BIFULCO
Telecommunications Specialist

d. TITLE
Telecommunications Specialist

e. SIGNATURE
Thomas E Bifulco

f. DATE SIGNED *(YYYYMMDD)*
2001/11/14

15a. ACTIVITY ACCOMPLISHING REVISION

b. REVISION COMPLETED *(Signature)*

c. DATE SIGNED *(YYYYMMDD)*